PART NUMBER	TH'D "P_1"	TH'D "P_2"	TH'D "P_3"	A REF	B REF	C REF	D REF	E REF	F REF
2256–2–2S	1/8–27	1/8–27	1/8–27	.78	.78	.66	.19	.19	.29
2256–4–4S	1/4–18	1/4–18	1/4–18	1.09	1.09	.88	.28	.28	.39
2256–6–6S	3/8–18	3/8–18	3/8–18	1.22	1.22	1.02	.41	.41	.53
2256–8–8S	1/2–14	1/2–14	1/2–14	1.47	1.47	1.23	.53	.53	.65
2256–12–12S	3/4–14	3/4–14	3/4–14	1.59	1.59	1.36	.72	.72	.85

REVISIONS			
REV.	DESCRIPTION	DATE	APPROVED

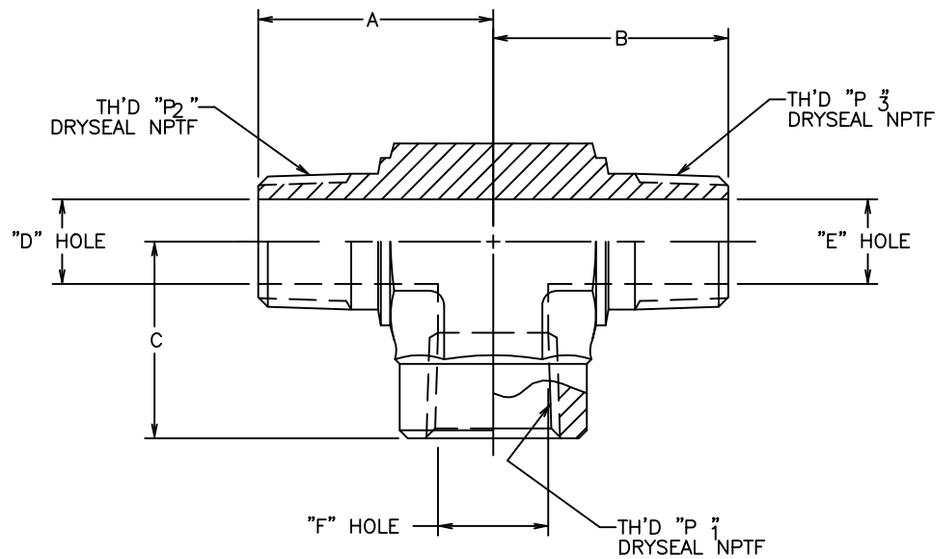

1. MATERIAL: STEEL.

THE REPRODUCTION, DISTRIBUTION AND UTILIZATION OF THIS DOCUMENT AS WELL AS THE COMMUNICATION OF ITS CONTENTS TO OTHER WITHOUT EXPLICIT AUTHORIZATION IS PROHIBITED. OFFENDERS WELL BE HELD LIABLE FOR THE PAYMENT OF DAMAGES. ALL RIGHT RESERVED IN THE EVENT OF THE GRANT OF A PATENT, UTILITY MODEL OR DESIGN. (PER ISO 16016)

DRAWN J. COGDELL	DATE 4–26–94	FLUID CONVEYANCE DIVISION
CHECKED R.D. GARRETT	DATE 5–5–94	
APPROVED R.D. GARRETT	DATE 5–5–94	DRAWING TITLE ADAPTER
RELEASED EN–F14804	DATE 5–5–94	PIPE TEE, EXTERNAL, EXTERNAL, INTERNAL
PROJECT NO. DP–24771	APC NO.	SIZE C · (CAGE) CODE NO. 01276 · DRAWING NUMBER 2256–S
DESIGN APPROVED		
APPROVED		U · SHEET 2

REV. · SH. 2 · DWG. NO. 2256–S

CONVERTED DRAWING | CADAM to AutoCAD | 8/98